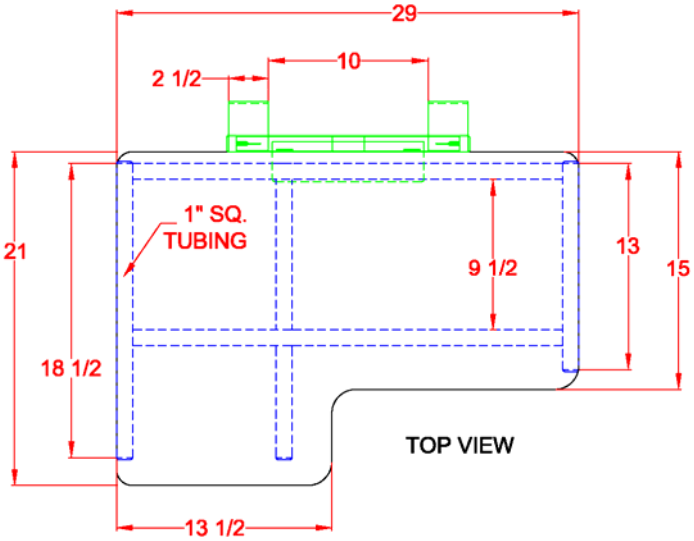

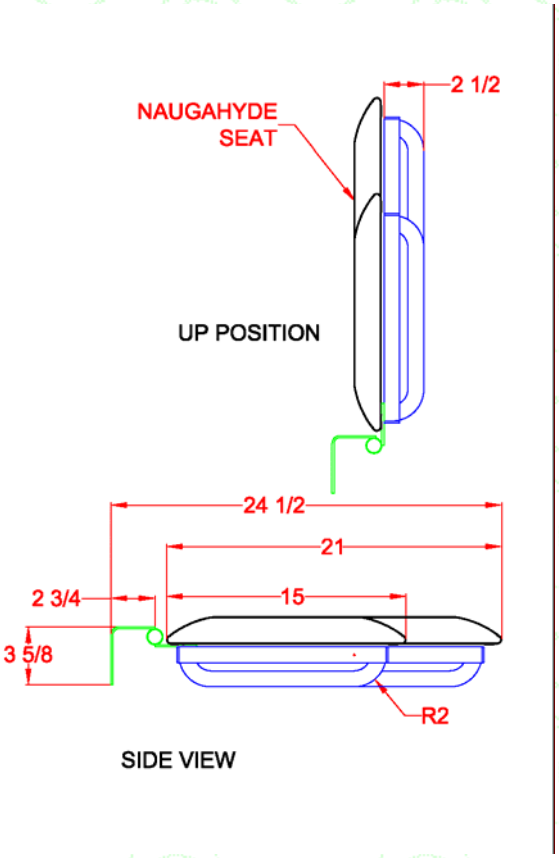

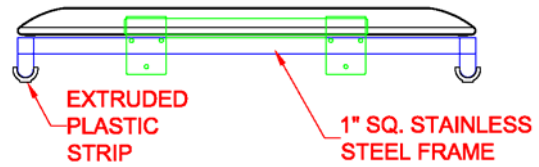

FRONT VIEW

OPERATION:
Seat is held in a raised position by a tension rod placed in the rear crossmember. When seat is lowered into the down position, the bars on the bottom of the seat rest on the tub ledges and are protected by extruded plastic strips.

ARCHITECTURAL SPECIFICATIONS:
Model #SH-414-L-(L or R) from Access-Able Designs at 494 53rd Square, Vero Beach FL 32968 phone 877-853-7816 fax 772-832-3200.

FRAME: Type 304 (18-8) S.S. tube, 1-1/4" (32 mm) x 18ga. (1.2mm) sq. mainframe with 1" (25mm) x 18ga. (1.2mm) rd. cross members . Leg: "H"-shaped yoke of type 304 (18-8) S.S. tubing, 1" (25mm) x 18ga. (1.2mm) rd. tubing, Heliarc welded to 1-1/4" (32mm) rd. x 12ga. (2.7mm) frame hinge. The seat safely stays in raised position by a tension rod inside the rear crossmember.

MATERIALS:
FRAME: Type 304 (18-8) SS tubing, 1-1/4" (32mm) x 18ga. (1.2mm) sq. main frame with 1" (25m) x 18ga. (1.2mm) rd. cross members.

WALL FLANGES (2): Type 304 (18-8) SS. Three mounting holes in each flange.

SEAT CHOICES (Designate when ordering)
NW or NA - White (NW) or Almond (NA) Naugahyde covering 2" (51mm) foam mounted on 1/2" (13mm) marine plywood.

PW, PA or PT - White (PW), Almond (PA) or Teak (PT) finish Phenolic 1/2" (13mm) x 3" (76mm) slats bolted to frame with SS screws.

INSTALLATION:
All Shower Seats must only be installed using suitable fasteners and sufficient in-wall backing materials. ADA mounting height for seat in lowered position is 17" (432mm) to 19"(482mm).

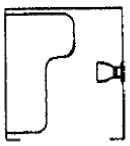

Left-handed seat

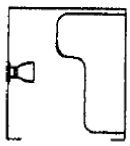

Right-handed seat