AGILITY POLES

511-145P

ITEM NO.	PART NUMBER	DESCRIPTION	QTY.
1	511-145	Agility Post	1
2	105-015	1-5/8" Alum. Pipe Plug	6

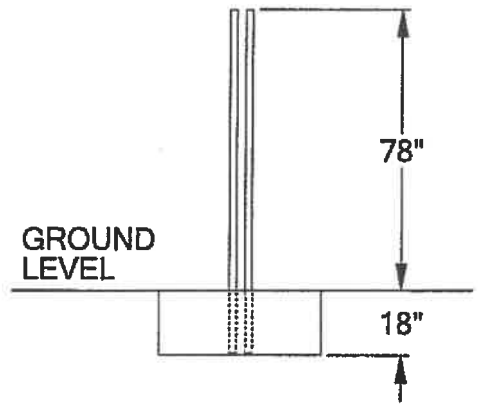

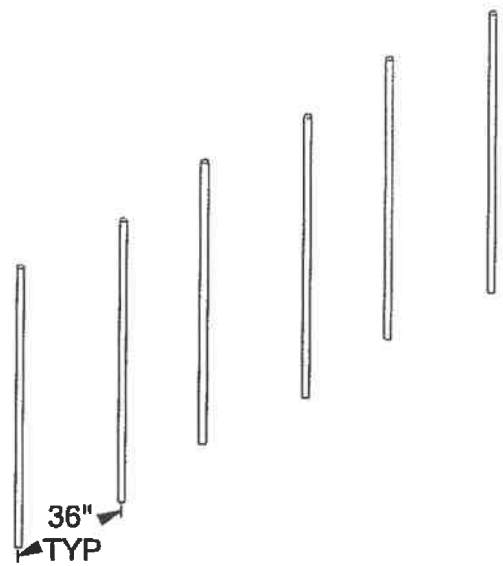

5 4 3 2 1